ALPHA Active Heat Sink FH90

DIM

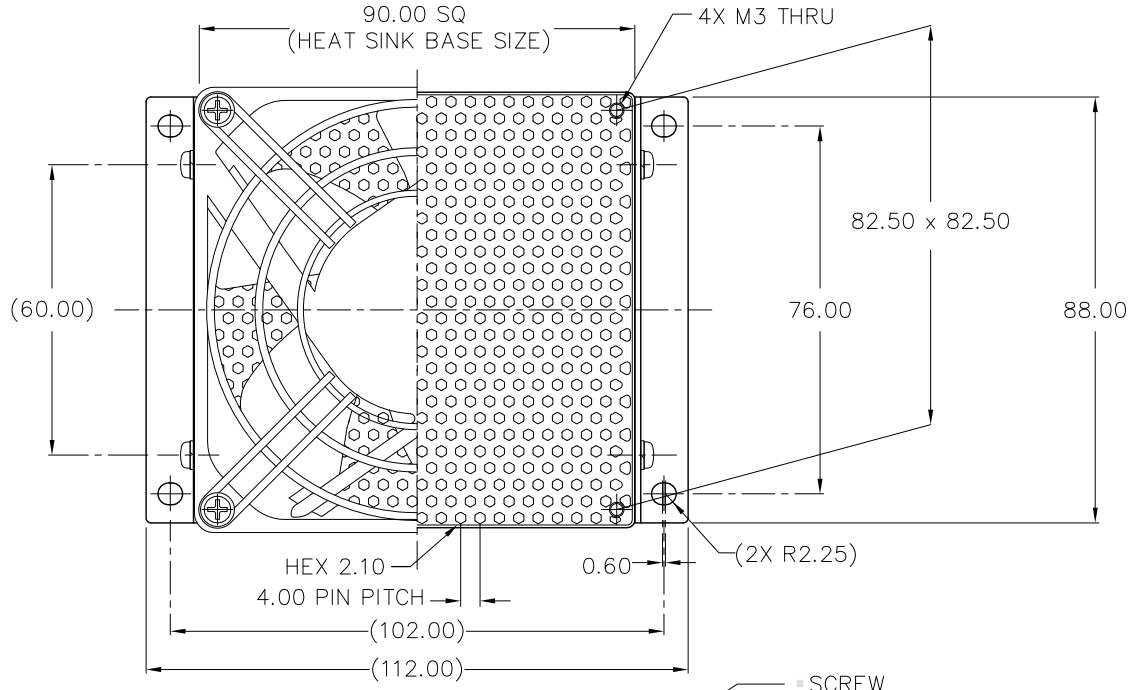

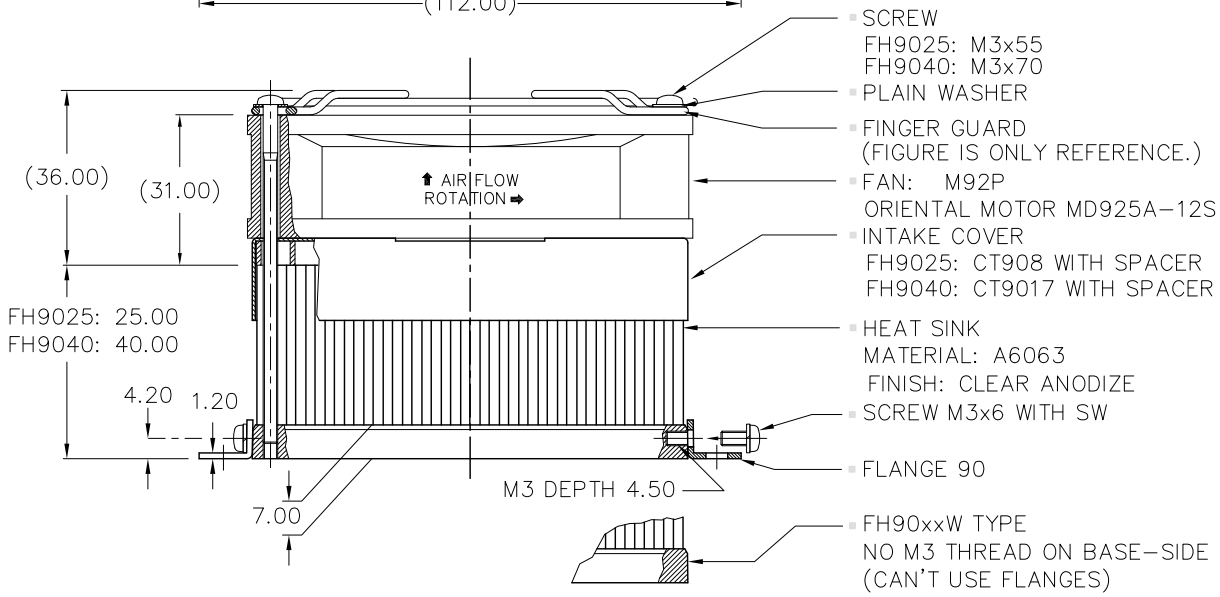

DIMENSIONS : mm

DATA

FH9025MU	0.21 ℃/W	
FH9040MU	0.15℃/W	

0 0.5 1.0

THERMAL RESISTANCE ℃/W

- TESTING SPECIFICATIONS DUMMY HEATER SIZE: 70SQ
- BASED ON ALPHA'S STANDARD TEST PROCEDURE. REFER TO TECHNICAL INFORMATION.

Alpha Company Ltd.

256-1 UEDA,NUMAZU-CITY SHIZUOKA-PREF.,JAPAN
PHONE +81(55)966 0789
FAX +81(55)966 9192
E mail : alpha@micforg.co.jp
URL : http://www.micforg.co.jp

Alpha Novatech, Inc. - a subsidiary of Alpha Company.

473 Sapena Ct. #12 Santa Clara, CA 95054 USA
PHONE +1(408)567-8082
FAX +1(408)567-8053
E mail : sales@alphanovatech.com
URL : http://www.alphanovatech.com